PT-CDL-S-DD-5C3P-4 SERIES

Smooth Finish Retrofit Recessed Dual Dimming Commercial Grade Downlight with CCT and Wattage Selector

Catalog Number:	Project Name:	Note:	Date:	Type:

Portor's fourth generation commercial grade recessed downlight is wattage and color tunable, and now with dual dimming technology allowing 0-10V as well as Triac dimming. With selectable CCT of 2700K, 3000K, 3500K, 4000K, or 5000K, eliminating the need to stock multiple color temperatures.

Ideal use for commercial complexes, hospitality, healthcare industry, schools, shopping centers, industrial areas and hotels.



CONSTRUCTION
PC driver housing and smooth aluminum reflector/trim with architectural white finish. Standard gasket included to ensure proper seal.

INSTALLATION
The adjustable housing clips allow for installation in a large range of commercial and architectural housings ranging from 4.25"-9.25" (109-235mm). These spring-action clips push up easily and fit securely for both retrofit and new construction installations.

ELECTRICAL
Luminaire is built with the highest quality LED drivers, ensuring energy efficiency. Optional emergency battery pack.

LISTING
ETL Listed, FCC, RoHS, CE & Energy Star Listed

LIFESPAN
5 year Limited Warranty, L70 50,000 hours.

TECHNICAL SPECIFICATION

CCT	2700K/3000K/3500K/4000K/5000K
CRI	90
DIMMING	0-10V and Triac Dimming
VOLTAGE	120V-277V
POWER FREQUENCY	60 Hz
CURRENT	0.11 - 0.35A
POWER FACTOR	>0.9
THD	≤20%
IP RATING	Wet Location
WARRANTY	5 year limited (Standard)

Intertek · ENERGY STAR · CALIFORNIA T24 COMPLIANT · RoHS COMPLIANT · FOR WET LOCATION · IC RATED



DIMENSION

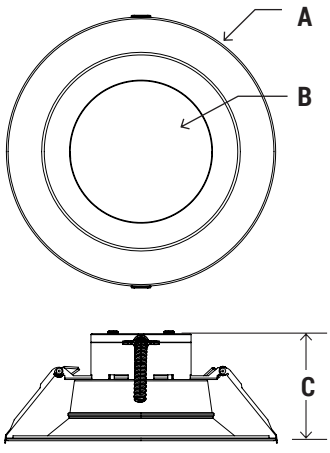

CATALOG NO.	PT-CDL-S-41-12-DD-5C3P-4	PT-CDL-S-61-22-DD-5C3P-4	PT-CDL-S-81-30-DD-5C3P-4	PT-CDL-S-101-38-DD-5C3P-4
A	5.51"	8.38"	9.64"	11.22"
B	3.46"	4.88"	5.24"	5.90"
C	3.85"	4.47"	4.52"	4.57"
	CUT-OUT: 4.25"	CUT-OUT: 6.25"	CUT-OUT: 8.25"	CUT-OUT: 9.25"

PT-CDL-S-DD-5C3P-4 SERIES

Smooth Finish Retrofit Recessed Dual Dimming Commercial Grade Downlight with CCT and Wattage Selector

Catalog Number:	Project Name:	Note:	Date:	Type:

ORDERING SAMPLE: **PT-CDL-S-4I-12-DD-5C3P-4-PT-EMA-8W-UNI-DLS-R-TRR-CDL-4I-BK**

PT-CDL	-	S	-		-	DD	-	5C3P	-	4	-		-	

Fixture

Series	Finish	Size-Max Wattage	Dimming	CCT/Wattage	Generation	Finish
PT-CDL	S (Smooth)	4I-12	DD (Dual Dimming)	5C3P (6W/9W/12W) (27K/30K/35K/ 40K/50K)	4	__ Blank (White) **CUSTOM COLOR** Powder Coating (Inquire for Details)
		6I-22		5C3P (12W/17W/22W) (27K/30K/35K/ 40K/50K)		
		8I-30		5C3P (17W/24W/30W) (27K/30K/35K/ 40K/50K)		
		10I-38		5C3P (22W/30W/38W) (27K/30K/35K/ 40K/50K)		

Controls/Sensors (Sold separately)

TEELIO[1]

__ Blank



PT-BTC-6
6A Bluetooth Power Pack

	-		-		-	

Add-On[3]

EM Battery

__ Blank



PT-EMA-8W
8W Low Output EM Battery Pack (Remote installation)

Fixture Add-on[3]

Mounting Option

__ Blank



UNI-DLS-R
4"/6" Universal housing for new construction



RP-DLS-4I
RP-DLS-6I
4" & 6" Rough Plate



RP-8I
8" Rough Plate

Fixture Add-on[3]

Trims

__ Blank

Other Option

*Warranty

__ Blank (5 Year Standard)

7YR
7 Year Limited Warranty

10YR
10 Year Limited Warranty

*MOQ applies. Please inquire for details.

[1] *DOWNLOAD THE TEELIO APP*

Download on the App Store | GET IT ON Google Play

[3] *SOLD SEPARATELY*

PT-CDL-S-DD-5C3P-4 SERIES

Smooth Finish Retrofit Recessed Dual Dimming Commercial Grade Downlight with CCT and Wattage Selector

Catalog Number:	Project Name:	Note:	Date:	Type:

LUMEN PACKAGES

(Delivered lumens are based on the actual IES results)

CATALOG NUMBER	WATTAGE	CCT	DELIVERED LUMENS	EFFICACY (LM/W)
 **PT-CDL-S-41-12-DD-5C3P-4**	6W	2700K	694	112
		3000K	714	117
		3500K	722	118
		4000K	728	117
		5000K	724	117
	9W	2700K	935	111
		3000K	957	118
		3500K	969	121
		4000K	967	119
		5000K	958	116
	12W	2700K	1,236	110
		3000K	1,289	118
		3500K	1,307	119
		4000K	1,302	117
		5000K	1,272	113

CATALOG NUMBER	WATTAGE	CCT	DELIVERED LUMENS	EFFICACY (LM/W)
 **PT-CDL-S-61-22-DD-5C3P-4**	12W	2700K	1,463	124
		3000K	1,463	124
		3500K	1,461	128
		4000K	1,462	127
		5000K	1,439	123
	17W	2700K	1,861	114
		3000K	1,949	124
		3500K	1,982	127
		4000K	1,979	125
		5000K	1,926	119
	22W	2700K	2,298	109
		3000K	2,425	120
		3500K	2,469	123
		4000K	2,456	121
		5000K	2,359	113

PT-CDL-S-DD-5C3P-4 SERIES

Smooth Finish Retrofit Recessed Dual Dimming Commercial Grade Downlight with CCT and Wattage Selector

Catalog Number:	Project Name:	Note:	Date:	Type:

LUMEN PACKAGES

(Delivered lumens are based on the actual IES results)

CATALOG NUMBER	WATTAGE	CCT	DELIVERED LUMENS	EFFICACY (LM/W)
 PT-CDL-S-81-30-DD-5C3P-4	17W	2700K	2,147	127
		3000K	2,207	135
		3500K	2,239	139
		4000K	2,246	137
		5000K	2,201	133
	24W	2700K	2,792	122
		3000K	2,917	132
		3500K	2,991	135
		4000K	3,070	137
		5000K	2,895	128
	30W	2700K	3,478	115
		3000K	3,629	127
		3500K	3,707	131
		4000K	3,675	128
		5000K	3,533	121

CATALOG NUMBER	WATTAGE	CCT	DELIVERED LUMENS	EFFICACY (LM/W)
 PT-CDL-S-101-38-DD-5C3P-4	22W	2700K	2,169	100
		3000K	2,256	109
		3500K	2,343	116
		4000K	2,391	117
		5000K	2,382	114
	30W	2700K	2,711	97
		3000K	2,951	105
		3500K	3,053	113
		4000K	3,088	114
		5000K	3,020	110
	38W	2700K	3,305	91
		3000K	3,523	100
		3500K	3,857	108
		4000K	3,827	108
		5000K	3,649	102

WHAT'S IN THE BOX?
- Fixture
- Installation sheet

QTY/CARTON
24 PIECES
FOR 4"

QTY/CARTON
8 PIECES
FOR 6", 8" & 10"